PART REV	DWG ISSUE	DATE	ECN NO.	APPVD BY	REL BY
–	–				

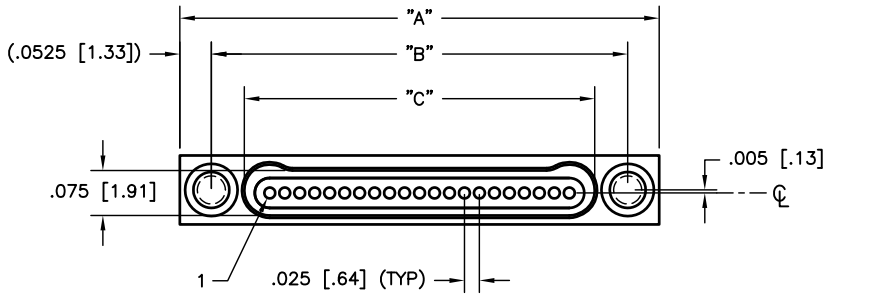

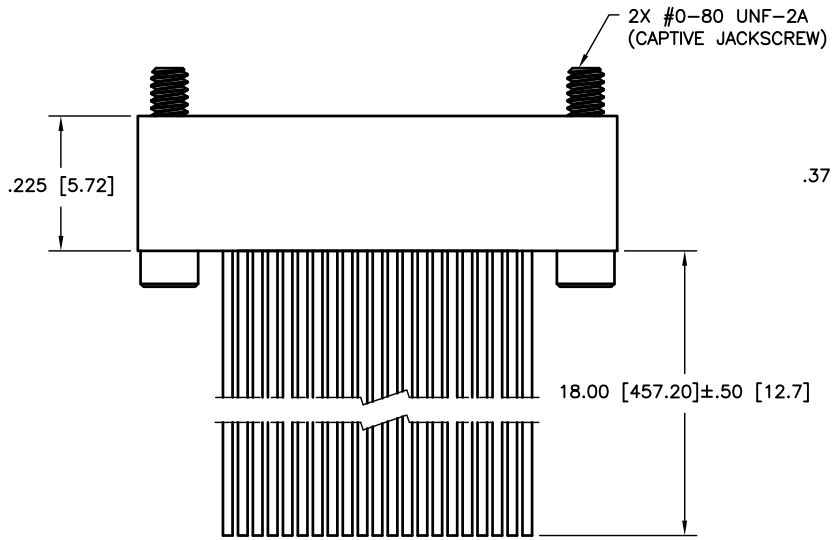

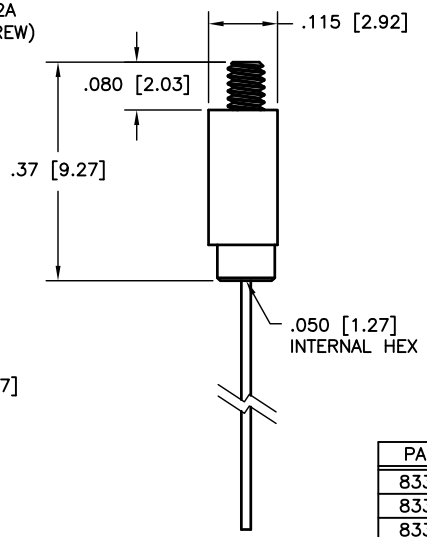

WIRING COLOR CODE

1, 11, 21	—	BLACK
2, 12	—	BROWN
3, 13	—	RED
4, 14	—	ORANGE
5, 15	—	YELLOW
6, 16	—	GREEN
7, 17	—	BLUE
8, 18	—	VIOLET
9, 19	—	GRAY
10, 20	—	WHITE

PART NO.	SIZE	"A"	"B"	"C"
833211622	9	.500 [12.70]	.395 [10.03]	.285 [7.24]
833221622	15	.650 [16.51]	.545 [13.84]	.435 [11.05]
833231622	21	.800 [20.32]	.695 [17.65]	.585 [14.86]
833241622	25	.900 [22.86]	.795 [20.19]	.685 [17.40
833251622	31	1.050 [26.67]	.945 [24.00]	.835 [21.21]
833261622	37	1.200 [30.48]	1.095 [27.81]	.985 [25.02]
833271622	51	1.550 [39.37]	1.445 [36.70]	1.335 [33.91]

3. PERFORMANCE: MEETS OR EXCEEDS M32139 PERFORMANCE SPECIFICATIONS
CONTACT RATING: 1 AMPERE MAXIMUM
INSULATION RESISTANCE: 5000 MEGOHMS MINIMUM @ 100 VDC
CONTACT RESISTANCE: 0.071 VOLT MAXIMUM DROP @ 1.0 AMPS (.071 OHMS) W/6.00" OF WIRE LISTED BELOW, PER MIL–DTL–32139

2. MATERIALS: SHELL: ALUMINUM 6061–T6, ELECTROLESS NICKEL PLATED PER AMS–C–26074
INSULATOR: LCP (LIQUID CRYSTAL POLYMER) GLCP–30F
CONTACT: BRASS ALLOY 735, GOLD PLATED PER ASTM B488
LEADS: 30 AWG, NEMA HP3, TYPE ET, COLOR CODED PER MIL–DTL–681, SYSTEM 1, EXCEPT USING 10 SOLID REPEATING COLORS, 18.0" +0.5/–.0 LONG
HARDWARE: 303 STAINLESS PER ASTM 582

1. MARKINGS: UMI, DATE CODE, UMI P/N AS SPACE PERMITS

NOTES: UNLESS OTHERWISE SPECIFIED

QUALITY SYMBOLS
MAJOR ▼ =
CRITICAL (C) =
SPC (S) =

UNLESS SPECIFIED:
ALL DIMENSIONS IN INCHES
GENERAL TOLERANCES:
3 PLACE ±.005
2 PLACE ±.010
ANGULAR ±2°

Ulti-Mate CAGE CODE
58967

SCALE 5:1
DWG SIZE B
THIRD ANGLE PROJECTION
REVISE ON CAD ONLY
DRAWN BY & DATE UMI 03–09–10
CHECKED BY & DATE
APPROVED BY & DATE
TITLE: NANO–D SINGLE ROW CONNECTOR FEMALE, SIZE XX, NMLXX–1S02–30F6–18.0 S01
MATERIAL: 2
Ulti-Mate Connector Inc.
CAD FILENAME SD–833231622.DWG
PART NO. SEE "TAB BLOCK"
DRAWING NO. SD–833231622
SHEET NO. 1 OF 1
REV –

THIS DRAWING CONTAINS INFORMATION THAT IS PROPRIETARY TO ULTI-MATE INCORPORATED AND SHOULD NOT BE USED WITHOUT WRITTEN PERMISSION.